Operations Report

Masa Tanaka

24-Apr-2003

CDF Weekly Meeting

This Week's Stores

Date	Store	Duration (hours)	Initial L (10^{30})	Delivered (nb^{-1})	Live (nb^{-1})	ε
Th 4/17	2436	16.5	33.7	1184.4	960.9	81.8%
Th 4/17	2438	18.1	33.1	1260.9	1163.0	92.2%
Fr 4/18	2441	20.4	35.7	1401.0	1019.0	72.7%
Sa 4/19	2443	18.1	22.0	984.9	775.2	78.7%
Su 4/20	2445	18.5	35.8	1374.5	930.7	67.7%
Mo 4/21	2447	17.9	39.7	1406.0	1084.1	77.1%
Total		110		7.6 pb^{-1}	5.9 pb^{-1}	78%

Tuesday—Wednesday: Accelerator study
Thursday: Supervised access

Accelerator status

- Very stable beam
  - Quick shot setup (2-4 hours), Low losses
  - L = 35~40e30 (except one store with B0 separator spark)
  - No Quench /No beam abort / All 6 stores were terminated normally
  - **7.6 pb^{-1} : Record delivered luminosity per week**
- 2 days accelerator study (Tuesday day ~)
  - Tevatron orbit smoothing
  - Ramp tuning
  - pbar only store

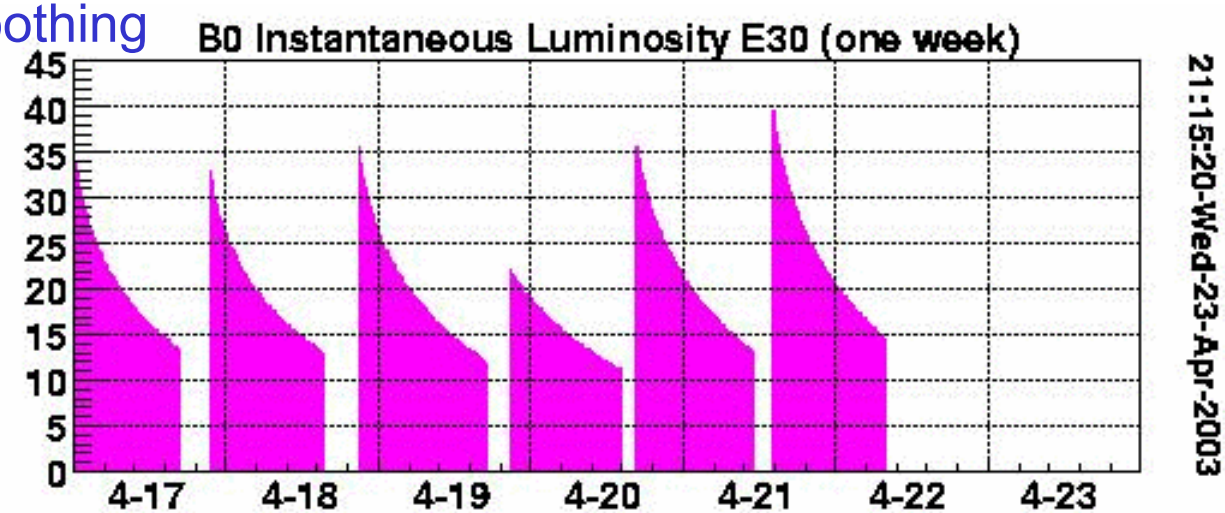

Data Taking Efficiencies

- Store 2436 (81.1%)
  - –Record shift efficiency “SHOT SETUP W/ SILICON”(93.4%)
  - –COT SL8 HV trip
  - –One VRB card failed (replaced during the store)
  - –End of store trigger table tests (Diffractive, Level 3)
- Store 2438 (92.2%)
  - –First indication of the EVB/L3 problems (next slide)
  - –COT SL8 HV trips at the end of store
- Store 2441 (72.7%)
  - – Several HV trips, COT, L00, CPR…(not caused by Beam losses)
  - – Silicon FTM fuse blows, taking out two SVX wedges (fixed on access)
- Store 2443 (78.7%) / Store 2445 (67.7%) / Store 2447 (77.1%)
  - – Many EVB/L3 errors, needed to restart Run many times
  - – 1—2 COT SL8 HV trips per store

EVB/L3 Problem

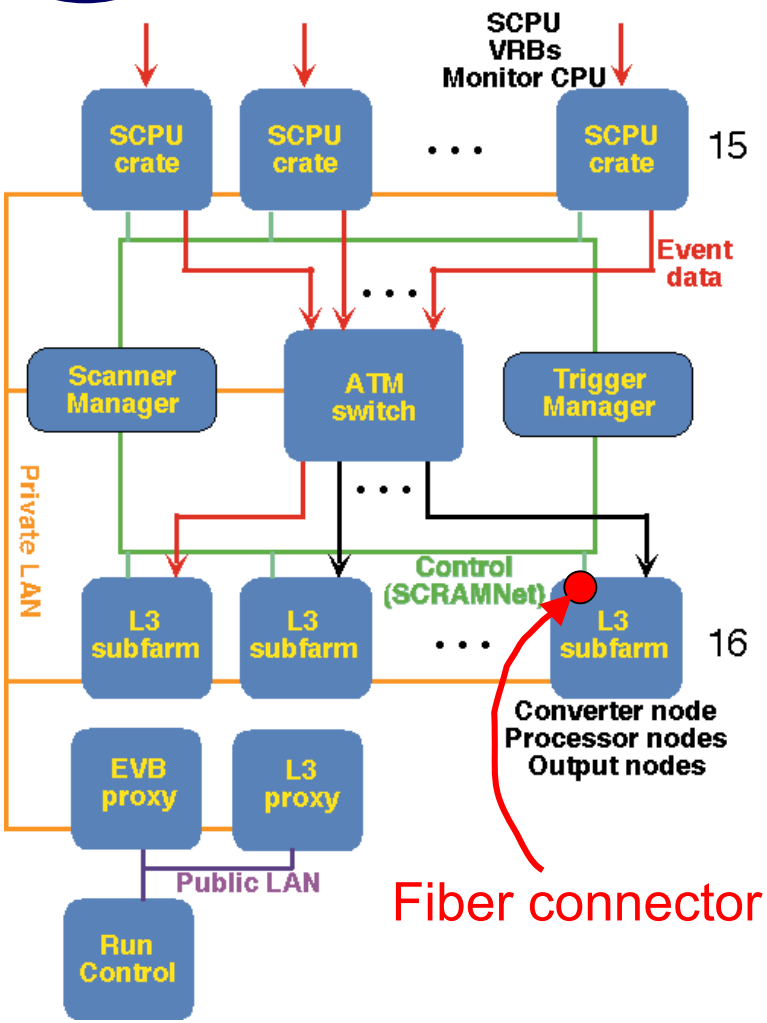

- (1) L3 farms dropout
  - L3 subfarms stop processing one by one
  - enough survived to prevent dead time
  - Reproduced without beam
- (2) DAQ stop for no clear reason
  - Run duration ~ 1 hour (>15 minutes startup)
  - Not reproduced without beam
- It took longer time for debugging the problem
  - Very quick shot setup!!
  - Lots of possible causes to be considered (SVX/VRB/RC/FE/L3/EVB…)
- It was finally traced back to freaky fiber connections in L3/EVB control line
  - Problem (1) is gone by reseating the fiber
  - We guess problem (2) is also gone (need beam)
- Cost: ~ 0.5 pb^{-1}

Supervised Access

- Supervised access is underway (Thursday 0600 ~)
- Two major works
  - Fix COT SL8 HV trip
    - Currently HV for one quadrant of a COT Layer (SL8) is lower by 50-100V
      - No inefficiency for triggering, online monitoring looks ok
      - To be checked for offline tracking efficiency
    - Open west Plug , Disable two wires causing the HV trip
  - Silicon FTM buffing
    - Modify FTM board: Less HRR, Less broken wire bonds
    - 38/55 FTMs were already done (~ 1 hour / FTM)
    - Finish remaining 25 FTMs
- Other works
  - COT TDC / CMX,BMU / WCAL PMT / TOF / EM timing / Had TDC …

Summary / Plan

- Best delivered luminosity per week
- ~ 80% data taking efficiency
  - ~7% : L3/EVB problem (transient problem: probably fixed)
  - ~5% : COT/SVX (being improved by this access)
  - >3% : DAQ/Trigger deadtime (next step, TT, CSL, Data compression …)
  - ~5% : from regular operation (startup, D-mode calib, etc)
- Supervised access underway
  - COT SL8, SVX FTMs
- Plan: Stack and store …
- Goal for Friday shift crew
  - "Record efficiency after >12 hour access"
    - #2285 : 76.6% : store after 2/25 2 shift access (COT/SVX)
    - #2370 : 58.0% : store after 3/28 Power outage